Swing Doors

ELEVATIONS

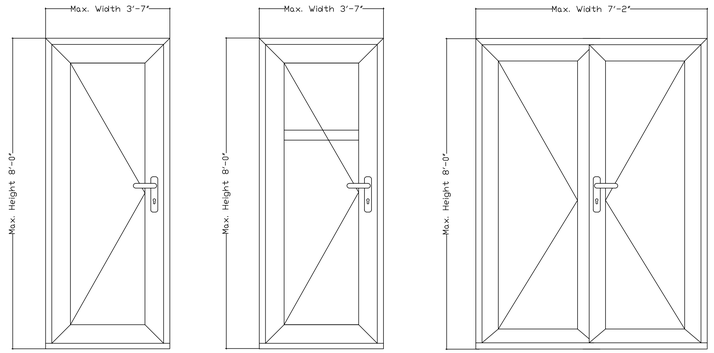

Max. Width for Entry Door is 43"

Max. Width for Balcony Door 43"

Max. Width for French Entry Door is 86"

Max. Width for French Balcony Door 86"

(A) ELEVATIONS - ZOLA uPVC
5/8" = 1'-0"

DETAILS

JAMB DETAIL - SEE HEAD DETAIL FOR DIMENSIONS

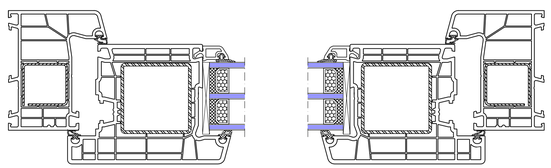

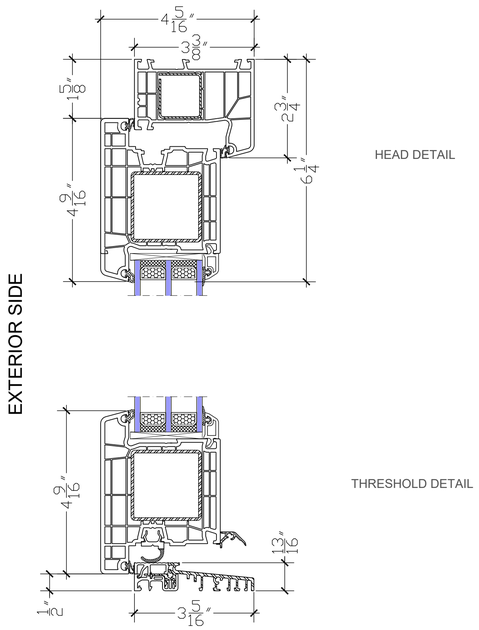

(1) OUTSWING DOOR JAMB, HEAD, AND THRESHOLD
6" = 1'-0"

JAMB DETAIL - SEE HEAD DETAIL FOR DIMENSIONS

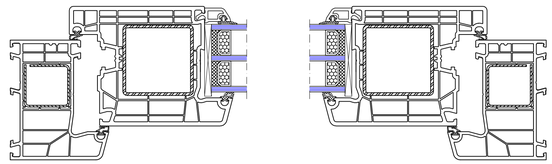

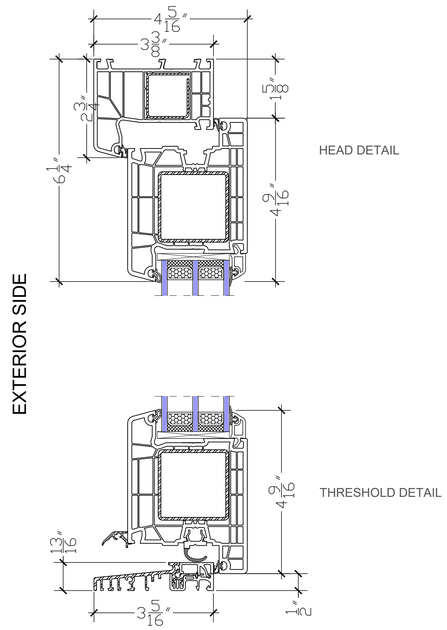

(2) INSWING DOOR JAMB, HEAD, AND THRESHOLD
6" = 1'-0"

JAMB DETAIL - SEE HEAD DETAIL FOR DIMENSIONS

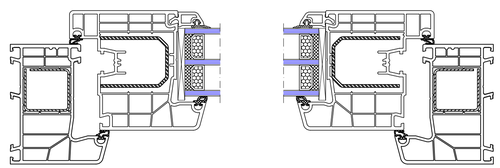

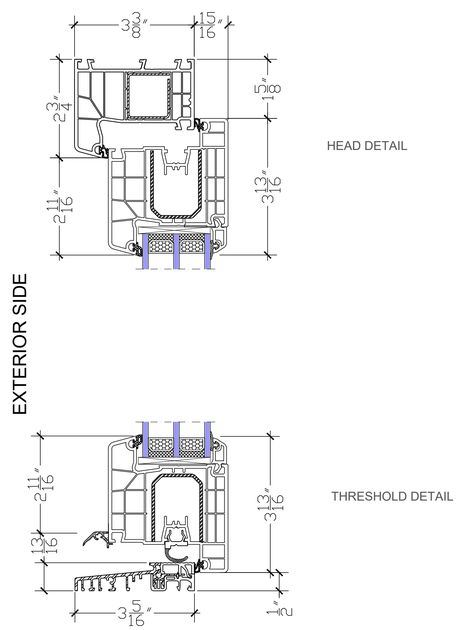

(3) INSWING BALCONY JAMB, HEAD, AND THRESHOLD
6" = 1'-0"

EUROMALL WINDOWS
www.euromallwindows.com

NOTE: DETAILS PROVIDED FOR EXPLANATION ONLY, ARCHITECT AND ENGINEER OF RECORD TO DEVELOP PROJECT SPECIFIC DETAILS.
ZOLA RESERVES RIGHTS TO MAKE TECHNICAL CHANGES AND UPDATES WHICH MAY NOT BE REFLECTED IN DRAWINGS

No.	Description	Date

THERMO UPVC DOOR DETAILS

ENTRY & BALCONY

Project number	
Date	1-31-2024
Drawn by	
Checked by	

A101

Scale AS INDICATED

Customized installation details by project architect or waterproofing consultant are required for a successful installation.

Lift-Slide Doors

ELEVATIONS

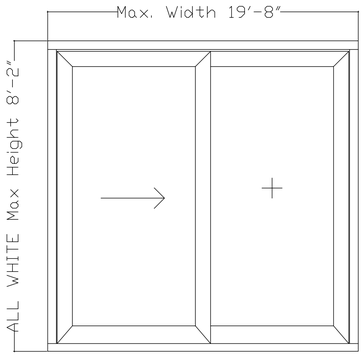

Max. width for an XO lift slide door in all white is 19' 8"

Max. width for an XO lift slide door with color foil is 16' 4"

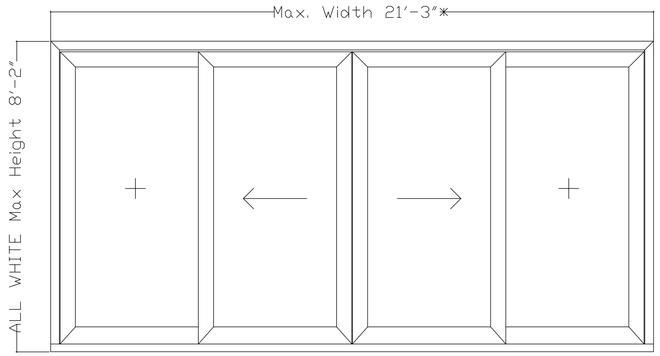

Max. width for an OXXO lift slide door in all white is 21' 3"

Max. width for an OXXO lift slide door with color foil is 21' 3"

(A) ELEVATIONS - ZOLA uPVC
5/8" = 1'-0"

DETAILS

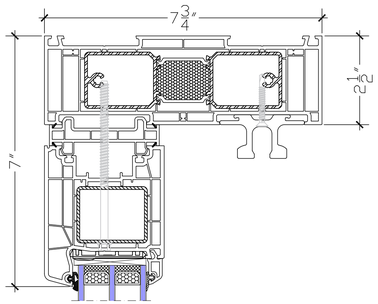

(1) LIFT SLIDE HEAD AND THRESHOLD FIXED SASH
6" = 1'-0"

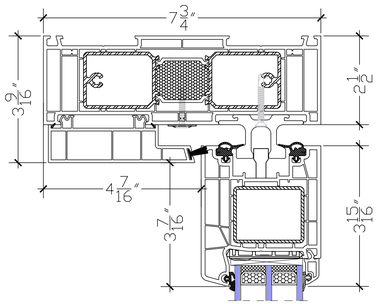

(2) LIFT SLIDE HEAD AND THRESHOLD OPERABLE SASH
6" = 1'-0"

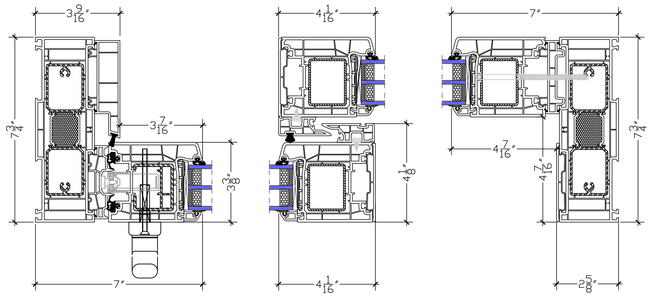

(3) XO LIFT SLIDE JAMB
4" = 1'-0"

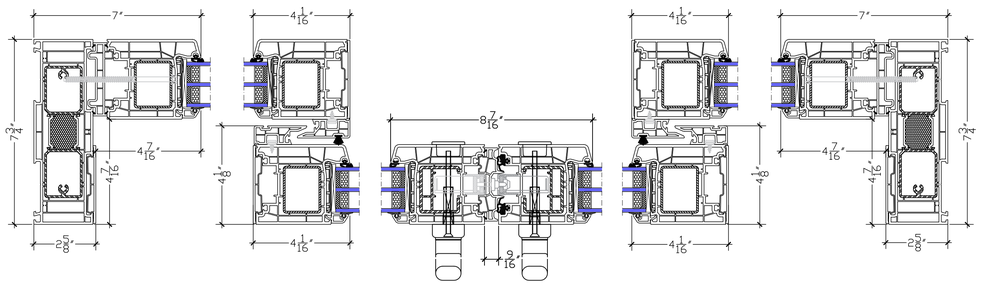

(4) OXXO LIFT SLIDE JAMB
4" = 1'-0"

EUROMALL WINDOWS
www.euromallwindows.com

NOTE: DETAILS PROVIDED FOR EXPLANATION ONLY, ARCHITECT AND ENGINEER OF RECORD TO DEVELOP PROJECT SPECIFIC DETAILS.
ZOLA RESERVES RIGHTS TO MAKE TECHNICAL CHANGES AND UPDATES WHICH MAY NOT BE REFLECTED IN DRAWINGS

No.	Description	Date

THERMO UPVC DOOR DETAILS

LIFT SLIDE

Project number	
Date	1-31-2024
Drawn by	
Checked by	

A102

Scale AS INDICATED

Customized installation details by project architect or waterproofing consultant are required for a successful installation.