Swing Doors

ELEVATIONS

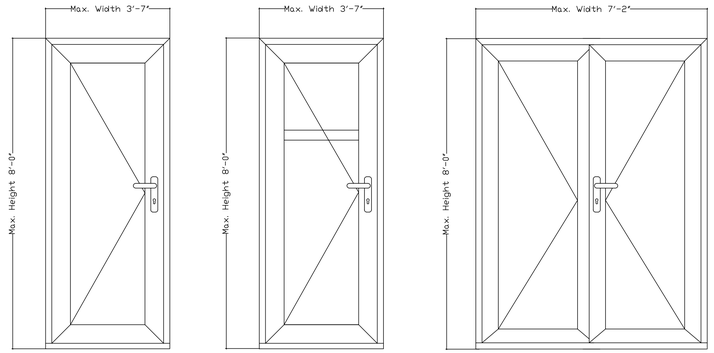

Max. Width for Entry Door is 43"

Max. Width for Balcony Door 43"

Max. Width for French Entry Door is 86"

Max. Width for French Balcony Door 86"

(A) ELEVATIONS - ZOLA uPVC
5/8" = 1'-0"

DETAILS

JAMB DETAIL - SEE HEAD DETAIL FOR MEASUREMENTS

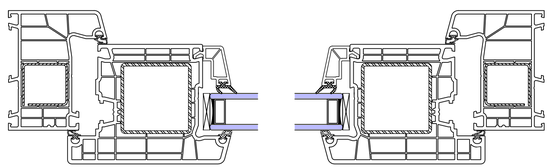

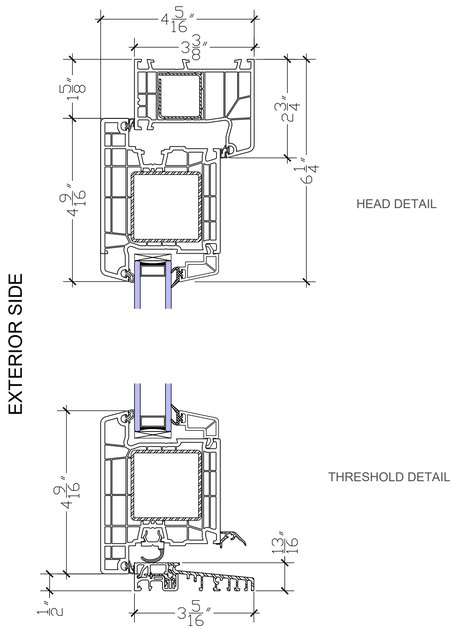

(1) OUTSWING DOOR JAMB, HEAD, AND THRESHOLD
6" = 1'-0"

JAMB DETAIL - SEE HEAD DETAIL FOR MEASUREMENTS

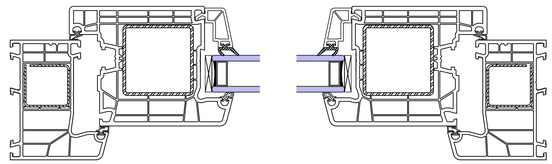

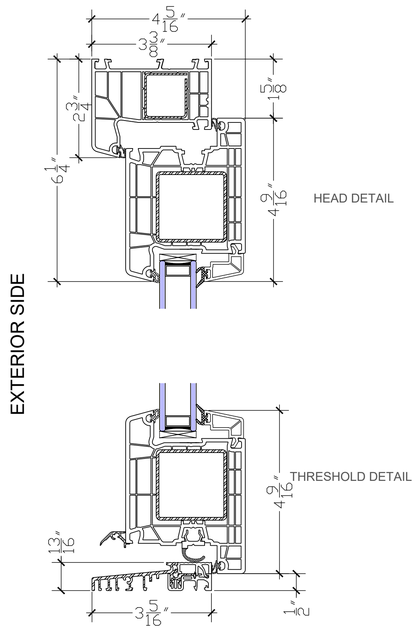

(2) INSWING DOOR JAMB, HEAD, AND THRESHOLD
6" = 1'-0"

JAMB DETAIL - SEE HEAD DETAIL FOR MEASUREMENTS

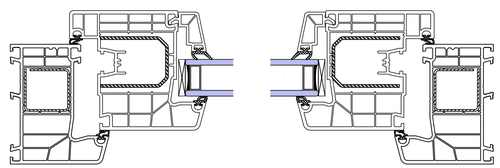

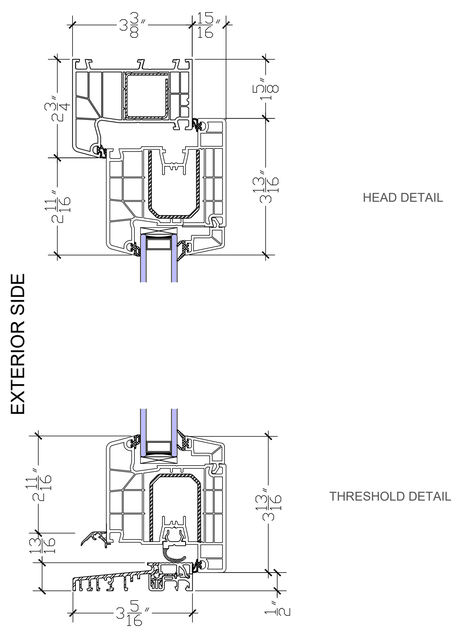

(3) INSWING BALCONY JAMB, HEAD, AND THRESHOLD
6" = 1'-0"

EUROMALL WINDOWS
www.euromallwindows.com

NOTE: DETAILS PROVIDED FOR EXPLANATION ONLY, ARCHITECT AND ENGINEER OF RECORD TO DEVELOP PROJECT SPECIFIC DETAILS. ZOLA RESERVES RIGHTS TO MAKE TECHNICAL CHANGES AND UPDATES WHICH MAY NOT BE REFLECTED IN DRAWINGS

No.	Description	Date

CLASSIC UPVC DOOR DETAILS

ENTRY & BALCONY

Project number
Date
Drawn by
Checked by

A101

Scale AS INDICATED

Customized installation details by project architect or waterproofing consultant are required for a successful installation.